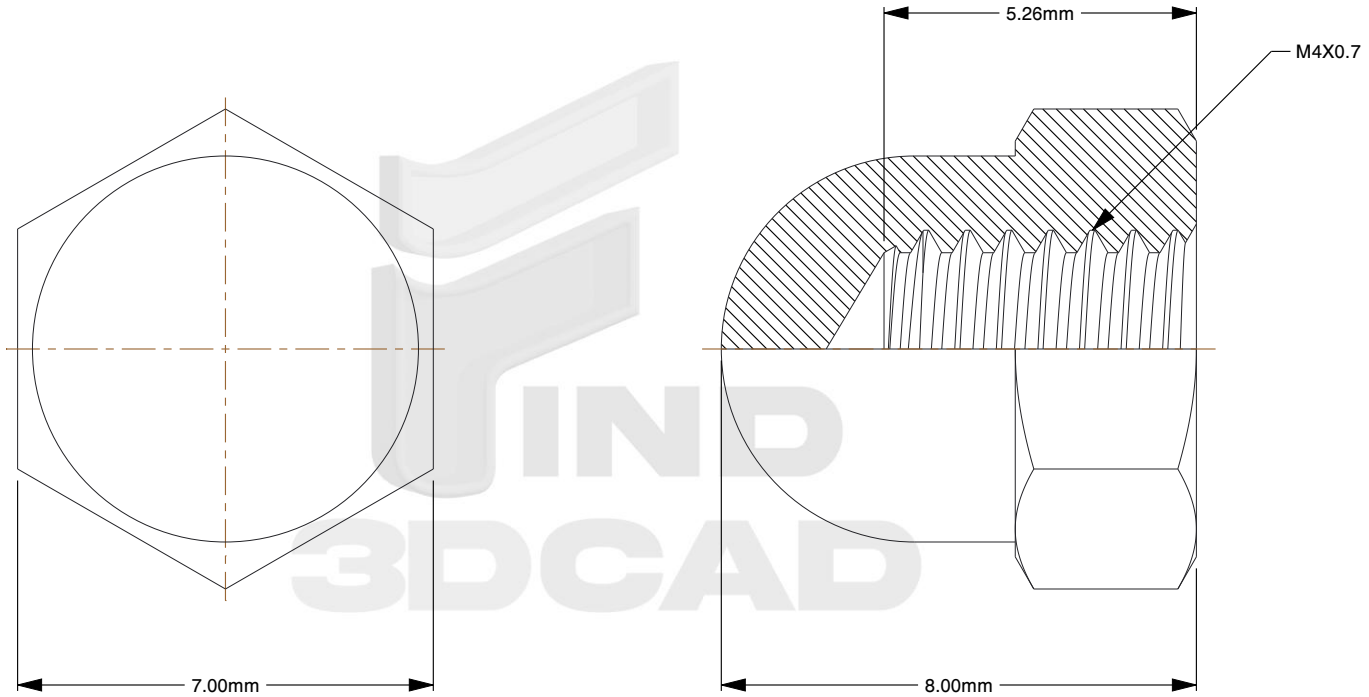

Notes:

1. **Thread Diameter + Pitch:** M4X0.7
2. **Thread Direction:** Right Hand
3. **Type:** Acorn Nut
4. **Material:** A2 Stainless Steel
5. **Finish:** Black Oxide
6. **Drive:** 7mm Wrench
7. **Internal Thread Depth:** 5.26mm
8. **Height:** 8mm
9. **Profile:** Normal
10. **Measurement System:** Metric
11. **Specification:** DIN 1587

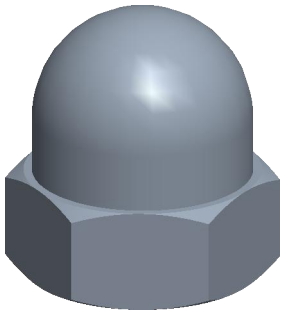

www.virtual3dcatalog.com

THIRD ANGLE PROJECTION

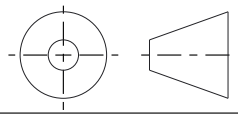

This file and the related information are provided for reference only and may change without notice. Virtual 3D Catalog does not guarantee the accuracy, completeness, or suitability of this file or the information provided. You are responsible for how you use this file and its information.

This document is the property of Virtual 3D Catalog. The information in it may not be copied, shared, or given to any third party without written permission from Virtual 3D Catalog.

DESCRIPTION

Acorn Nut, Coarse
Stainless + Black Oxide
DIN 1587

TITLE

Acorn Nut

Sheet Size	PART NUMBER	Rev.	ISSUED
A	V3D-NA4BLKSS	01	2026-10-22

SCALE: 7.856

Unless otherwise specified Dimensions are in MILLIMETERS