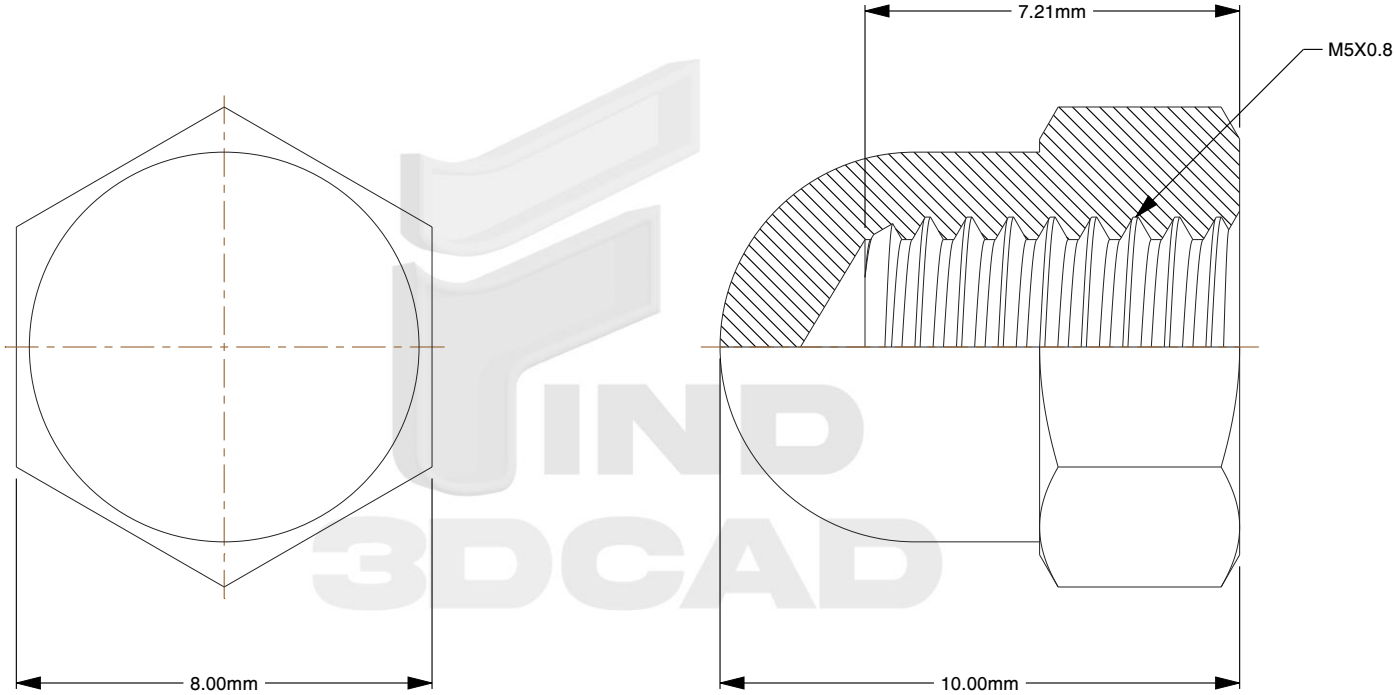

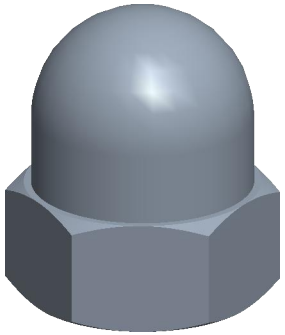

Notes:

1. **Diameter & Thread / Width:** 5MM - .8
2. **Grade / Class (metric):** 18-8
3. **Head Style / Add-On's:** ACORN
4. **Material:** STAINLESS
5. **Type Item:** NUT

www.virtual3dcatalog.com	THIRD ANGLE PROJECTION
This file and the related information are provided for reference only and may change without notice. Virtual 3D Catalog does not guarantee the accuracy, completeness, or suitability of this file or the information provided. You are responsible for how you use this file and its information.	This document is the property of Virtual 3D Catalog. The information in it may not be copied, shared, or given to any third party without written permission from Virtual 3D Catalog.
DESCRIPTION 5MM - .8 18-8 STAINLESS ACORN NUT	TITLE Acorn Nut

Sheet Size	PART NUMBER	Rev.	ISSUED
A	MACN58S	01	2026-10-28

SCALE: 6.874	Unless otherwise specified Dimensions are in MILLIMETERS