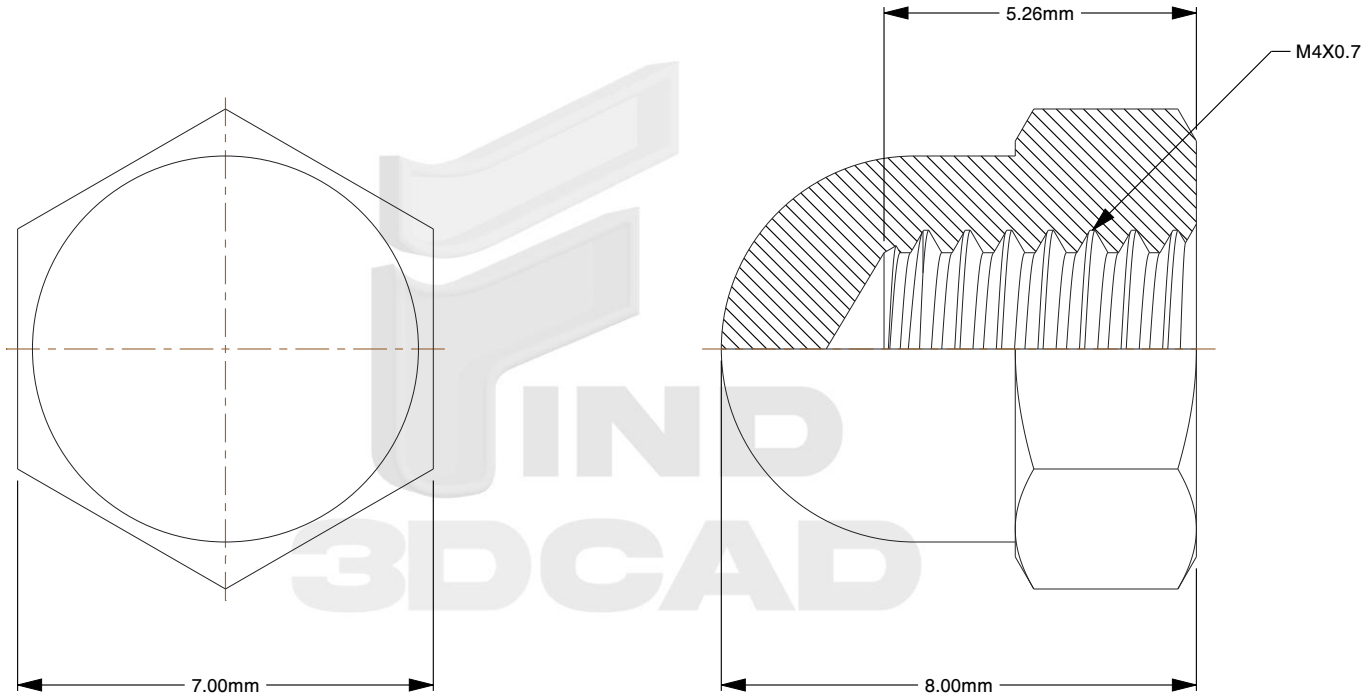

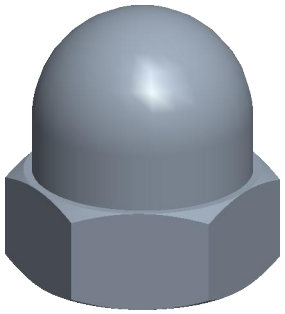

Notes:

1. **Size:** M4-0.70
2. **Diameter:** M4
3. **Fastener Thread:** COARSE
4. **Plating:** ZINC CR + 3

www.virtual3dcatalog.com	THIRD ANGLE PROJECTION
This file and the related information are provided for reference only and may change without notice. Virtual 3D Catalog does not guarantee the accuracy, completeness, or suitability of this file or the information provided. You are responsible for how you use this file and its information.	This document is the property of Virtual 3D Catalog. The information in it may not be copied, shared, or given to any third party without written permission from Virtual 3D Catalog.
DESCRIPTION Metric Hex Domed Acorn Nuts DIN 1587 Class 6 Zinc CR + 3	TITLE Hex Domed Acorn Nut

Sheet Size	PART NUMBER	Rev.	ISSUED
A	417008	01	2026-10-26

SCALE: 7.856	Unless otherwise specified Dimensions are in MILLIMETERS